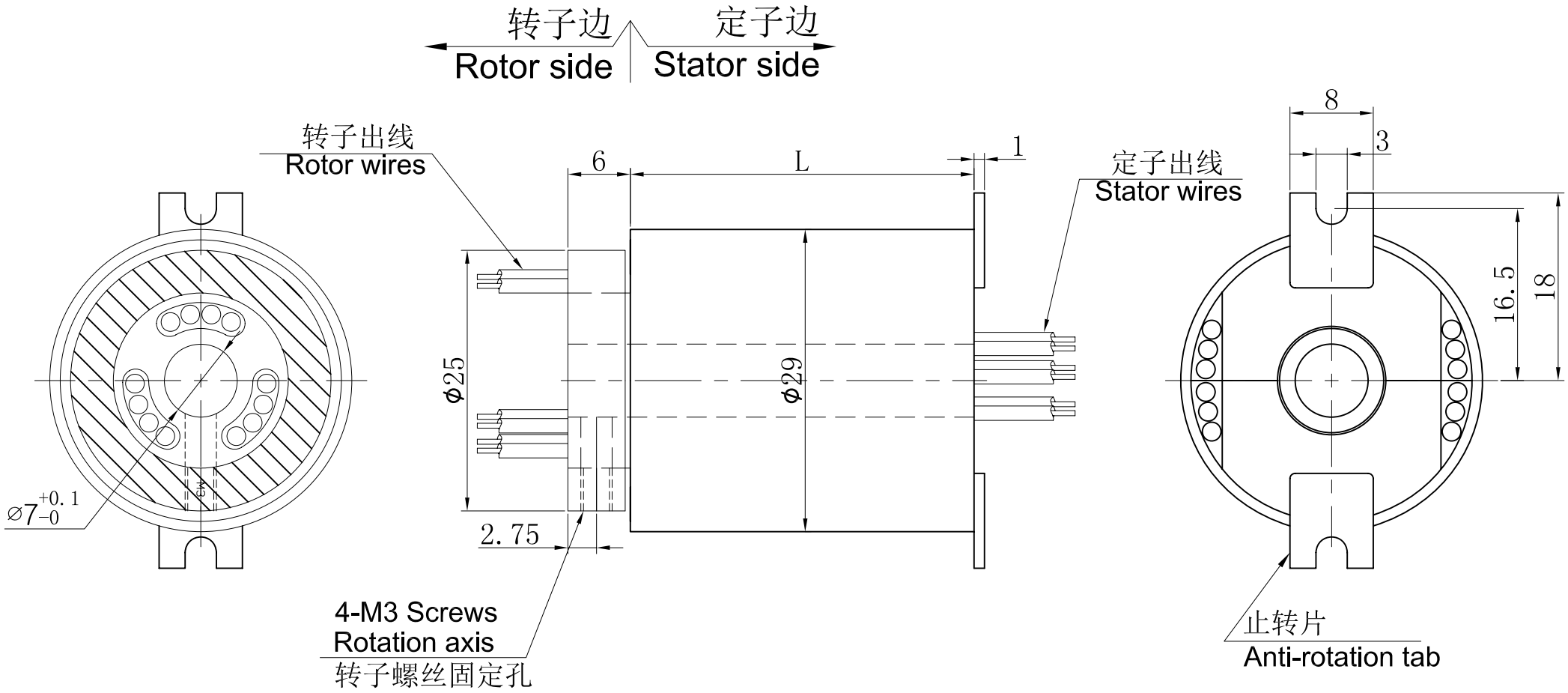
转子边
Rotor side
定子边
Stator side
转子出线
Rotor wires
定子出线
Stator wires
6
L
1
8
3
16.5
18
φ25
φ29
2.75
4
⌀7 +0.1 -0
4-M3 Screws
Rotation axis
转子螺丝固定孔
止转片
Anti-rotation tab