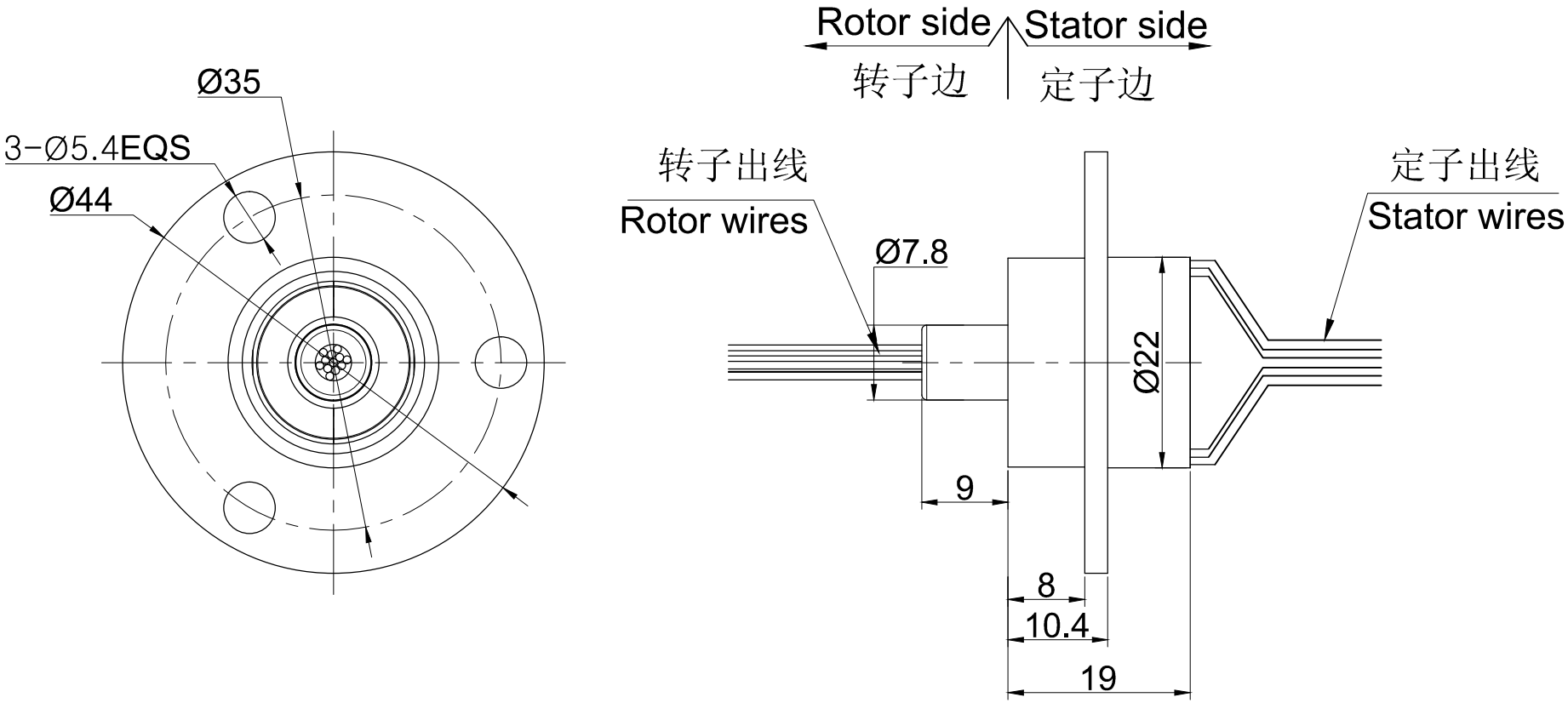
Rotor side
Stator side
转子边
定子边
Ø35
3-Ø5.4EQS
Ø44
转子出线
Rotor wires
定子出线
Stator wires
Ø7.8
Ø22
9
8
10.4
19